NO:2021.04

CHINT ELECTRICS

NXM Series
Moulded-Case Circuit-Breaker

User Instructions

Standard:IEC/EN 60947-2

⚠ Safety Warning

1. Installation in any damp, condensed-phase environment with inflammable and explosive gas is forbidden.Do not operate the product with wet hands.
2. You are prohibited from touching the conductive part when the product is operating.
3. When the product is being installed or maintained, the power must be switched off.
4. The product must not be installed in the place where gas medium can corrode metal and damage insulation.
5. In order to avoid dangerous accidents, the installation and fixation of the product must be carried out in strict accordance with the requirements of the user instructions.

CE KEMA EUR

1 Use Information

a) Ambient temperature for normal use: - 5 ℃ ~ + 40 ℃;

Note: if it is used within the range of - 35 ℃ ~ + 70 ℃, please consult with the manufacturer

b) If the altitude exceeds 2000m, please consult with the manufacturer;

c) See the product sample for the inverse time lag, temperature compensation curve and altitude derating curve of the product;

d) Pollution degree: degree 3;

e) Main circuit installation category: Ⅲ;

f) Degrees of protection provided by enclosure: IP30 (except wiring terminals);

g) Rated insulation voltage Ui: 800V (NXM-63/160/125/250);

1000V (NXM-400/630/800/1000/1250/1600).

2 Inspection and Test

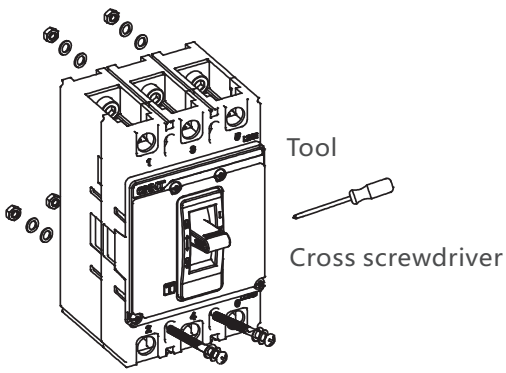

⚠

1. Determine product technical parameters;
2. Only qualified and professional technicians are allowed for installation, operation and maintenance.

Type		Screw	Nut	Flat gasket	Spring washer	PCS		
						2P	3P	4P
NXM-63 NXM-125	S	M4×62				2	4	4
	H	M4×72				-		
NXM-160		M4×45				2	4	4
NXM-250	S	M4×45				2	4	4
	H	M4×90				-		
NXM-400、NXM-630		M5×75				-	4	4
NXM-800		M5×75				-	4	4
NXM-1000		M6×90				-	4	4
NXM-1250、NXM-1600		M5×140				-	4	4

Figure 1 Inspection

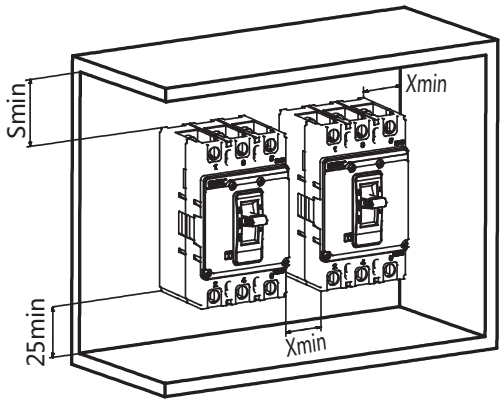

Unit: mm

Type	S	X
NXM-63 NXM-125 NXM-160 NXM-250	50	25
NXM-400 NXM-630 NXM-800 NXM-1000 NXM-1250 NXM-1600	100	50

⚠

Ensure minimum installation distance

Figure 2 Minimum installation distance

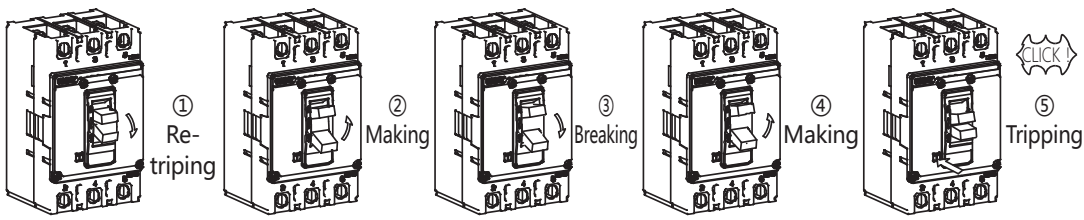

Figure 3 Test

3 Overall and Installation dimension

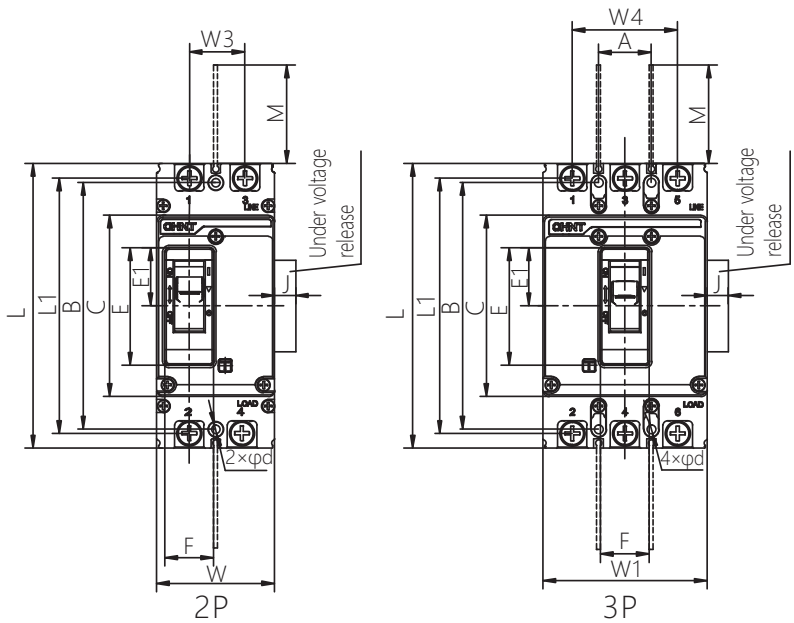

Figure 4-1 NXM-63~250 front-panel wiring overall and installation dimension

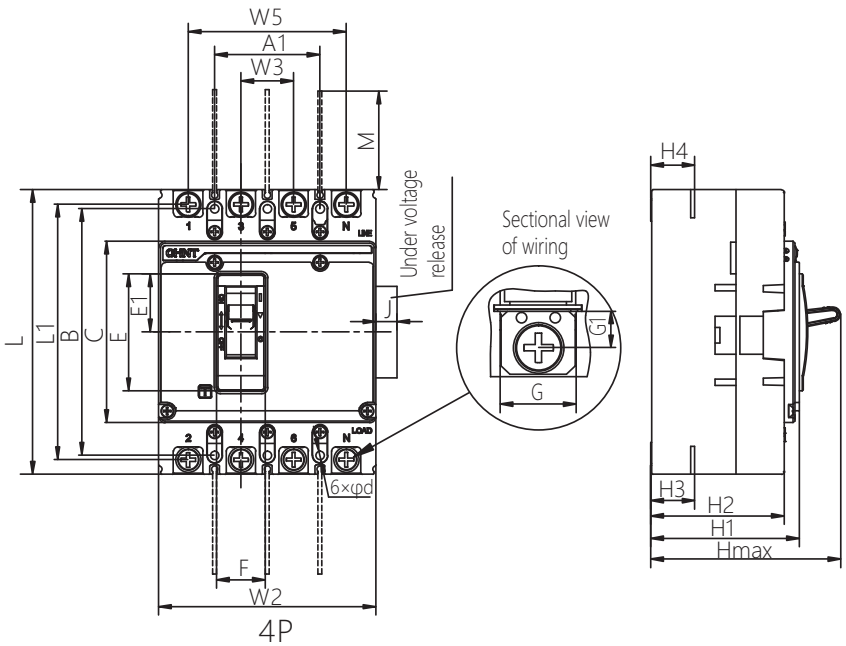

Figure 4-2 NXM-63~250 front-panel wiring overall and installation dimension

Table 1 NXM-63~250 overall and installation dimension

Unit: mm

Dimension	Code	Specification					
		NXM-63S NXM-125S	NXM-63H NXM-125H	NXM-160S	NXM-160H	NXM-250S	NXM-250H
Overall dimension	C	86		88		102	
	E	55.5		51.7		56	
	E1	27.5		24.5		30.5	
	F	23		29		29	
	G	17.5		16.5		23	
	G1	8		7.5		10	
	J	17.5		25		25	
	Hmax	90	100	96	112	98	123
	H1	71	81	75.5	91	77	102
	H2	64	74	62	77.5	62	87
	H3	21	31	24.5		23	24
	H4	21	31	24.5		24.5	
	L	135		155		165	
	L1	121		135		145	
	M	49		50		101.5	
	W	56		63		78	
	W1	78		90		105	

Table 1 (Continued)

Dimension	Code	Specification					
		NXM-63S NXM-125S	NXM-63H NXM-125H	NXM-160S	NXM-160H	NXM-250S	NXM-250H
	W2	103		120		140	
	W3	25		30		35	
	W4	50		60		70	
	W5	75		90		105	
Installation dimension	A	25		30		35	
	A1	50		60		70	
	B	117		130.5		126	
	φd	4.2		4.5×6		4.5	

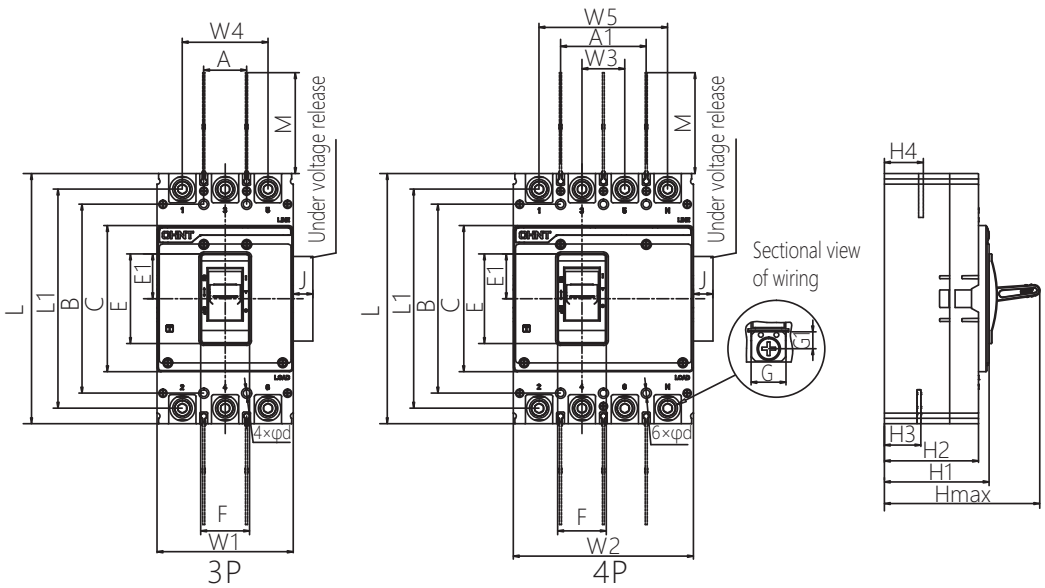

Figure 5 NXM-400~1600 front-panel wiring overall and installation dimension

Table 2 NXM-400~1600 overall and installation dimension

Unit: mm

Dimension	Code	Specification				
		NXM-400 NXM-630	NXM-800	NXM-1000	NXM-1250	NXM-1600
Overall dimension	C	150	160	170	175	
	E	92	91	100	120	
	E1	46	45	52	37.8	
	F	50	50	60	78	
	G	32.5	44.5	44.5	53	
	G1	11.5	15	15	15	
	J	25	25	25	25	

Table 2 (Continued)

Dimension	Code	Specification				
		NXM-400 NXM-630	NXM-800	NXM-1000	NXM-1250	NXM-1600
	Hmax	161	165	168	202	207
	H1	108.5	114	118	153	158
	H2	97.5	103.5	106	143	148
	H3	40.5	43	42	57	65
	H4	41.5	45	43	57	65
	L	257	270	280	370	
	L1	225	235	243	342	
	M	104	104	106	92.5	
	W1	140	182	210	210	
	W2	185	240	280	280	
	W3	44	58	70	70	
	W4	88	116	140	140	
	W5	132	174	210	210	
Installation dimension	A	44	58	70	70	
	A1	88	116	140	140	
	B	194	200	243	314	
	φd	7	7	7.2	6	

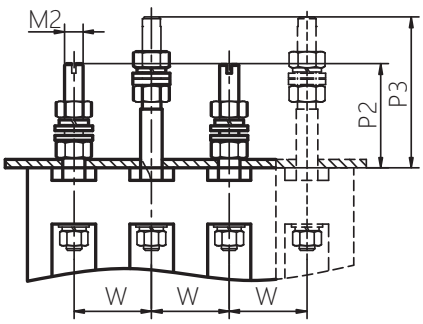

Figure 6 NXM-63~250 rear wiring overall and installation dimension

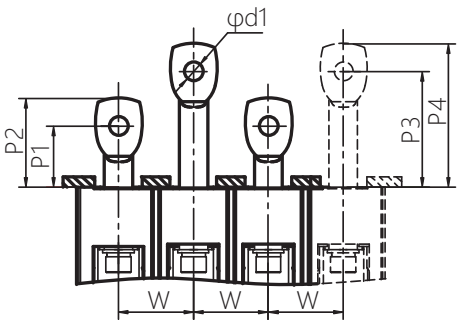

Figure 7 NXM-400~800 rear wiring overall and installation dimension

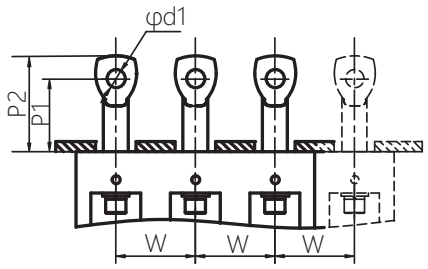

Figure 8 NXM-1000 rear wiring overall and installation dimension

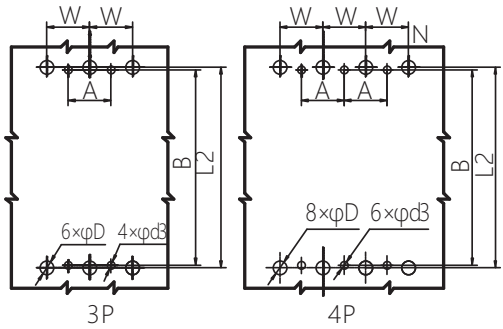

Figure 9 NXM series rear wiring mounting plate hole dimension

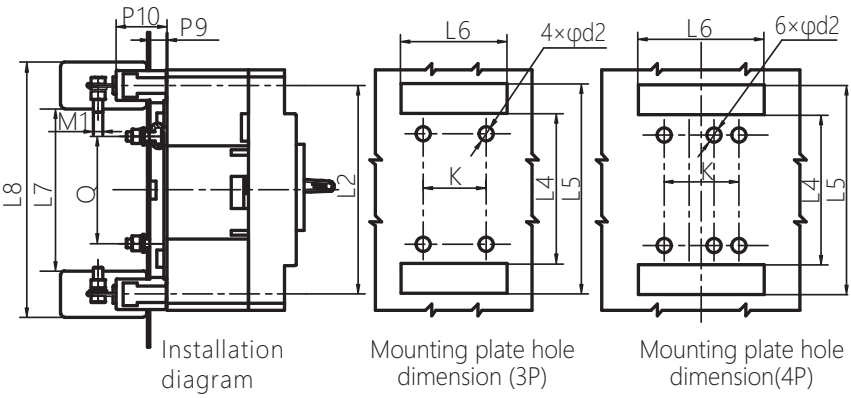

Figure 10 NXM series plug-in wiring overall and installation dimension

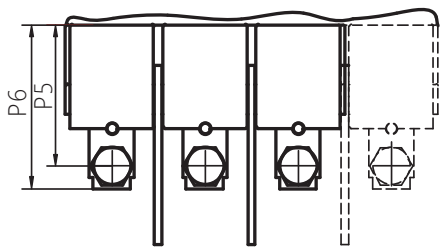

Figure 11 NXM-63/125/400/ 630/800/1000 plug-in structure

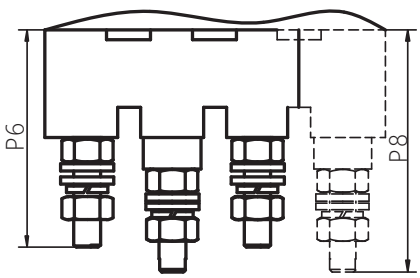

Figure 12 NXM-160 plug-in structure

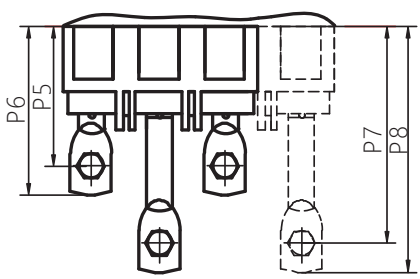

Figure 13 NXM-250 plug-in structure

Table 3 NXM series back-panel wiring overall and installation dimension

Unit: mm

Dimension	Code	Specification					
		NXM-63 NXM-125	NXM-160	NXM-250	NXM-400 NXM-630	NXM-800	NXM-1000
Overall dimension	W	25	30	35	44	58	70
	P1	——	——	——	40	46	64
	P2	67.5	63.5	67.5	58	66	84
	P3	100.5	96.5	108.5	75	77	——
	P4	——	——	——	93	99	——
	P5	44.5	——	77	88	92	143.5
	P6	50.5	75	95	111	110	158.5
	P7	——	——	132	——	——	——
	P8	——	135	150	——	——	——
	P9	8.5	13	13	25	23	27
	P10	29.5	38	47.5	60	60	87
	M2	M8	M8	M10	——	——	——
	φd1	——	——	——	φ12	φ16	φ16
	M1	M6	M10	M10	M10	M12	M12
Installation dimension	φd2	5.5	8	6	9	9	12
	φD	11.8	11	12	33	40	40
	L2	121	135	147	225	235	243
	B	117	130.5	126	194	200	243
	L4	92	106	108	168	168	177
	L5	144	167	184	283	302	309
	L6	3P:80 4P:106	3P:94 4P:124	3P:107 4P:142	3P:142 4P:187	3P:178 4P:236	3P:214 4P:284
	L7	75	——	——	169	170	181
	L8	159	——	——	281	300	305
	K	3P:50 4P:75	3P:60 4P:90	3P:70 4P:105	3P:88 4P:132	3P:100 4P:166	3P:90 4P:185
	Q	60	72	76	145	124	146
	A	25	30	35	44	58	70
	Φd3	4.5	4.5	4.5	7	7	7

4 Installation and Wiring

Installation

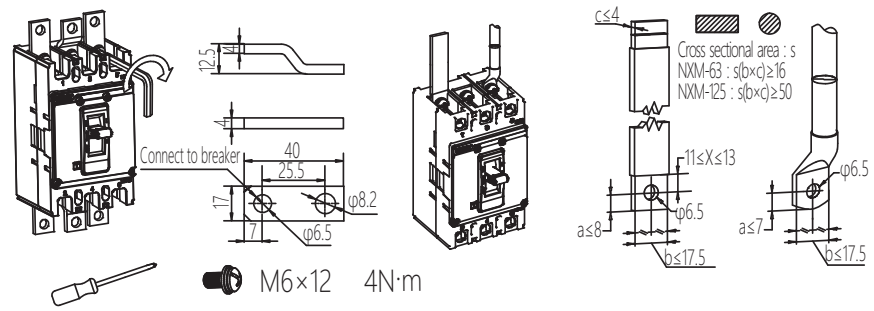

Figure 14 NXM-63/NXM-125 connecting plate and wiring dimension

Installation

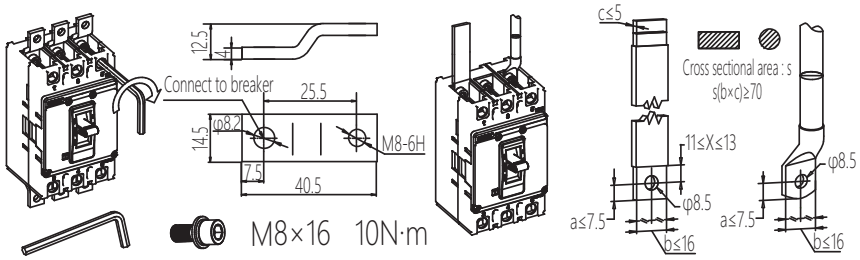

Figure 15 NXM-160 connecting plate and wiring dimension

Installation

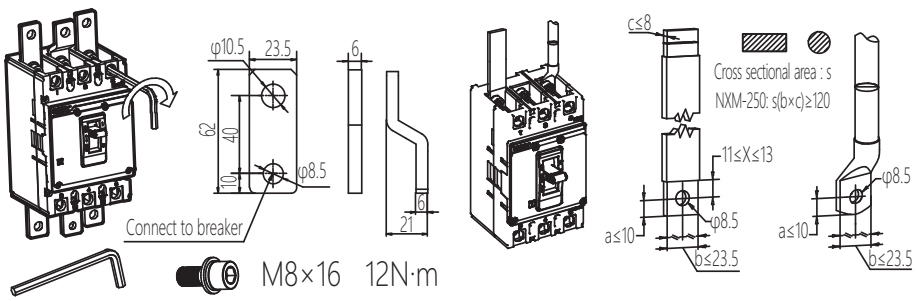

Figure 16 NXM-250 connecting plate and wiring dimension

Installation

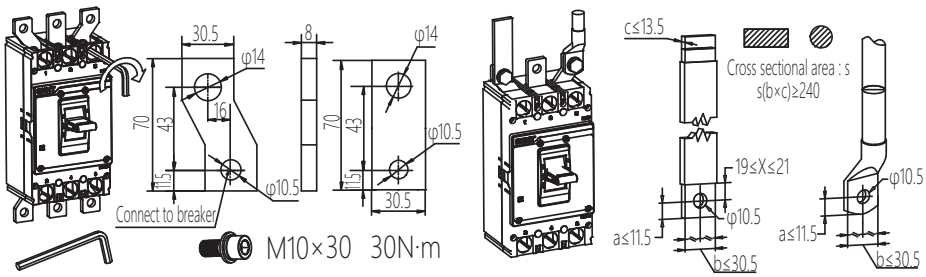

Figure 17 NXM-400 connecting plate and wiring dimension

Installation

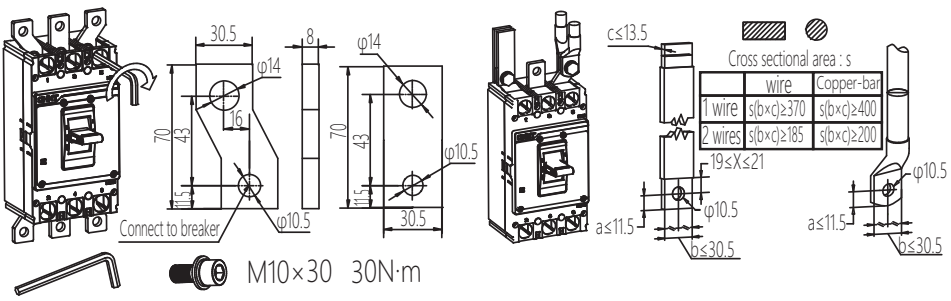

Figure 18 NXM-630 connecting plate and wiring dimension

Installation

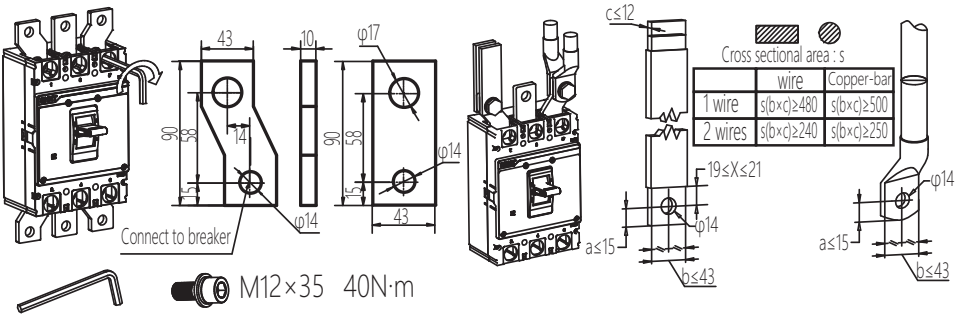

Figure 19 NXM-800 connecting plate and wiring dimension

Installation

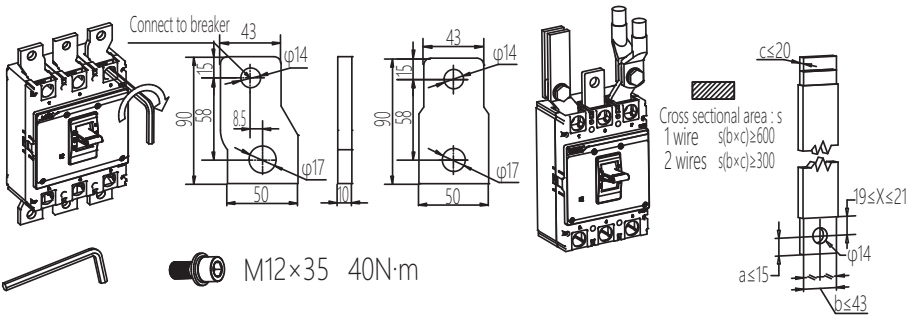

Figure 20 NXM-1000 connecting plate and wiring dimension

Installation

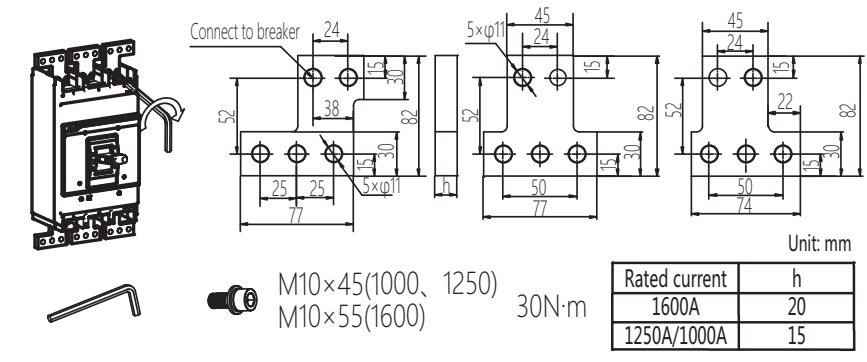

Unit: mm

Rated current	h
1600A	20
1250A/1000A	15

Figure 21 NXM-1250/ NXM-1600 connecting plate and wiring dimension

5 Attachment Information

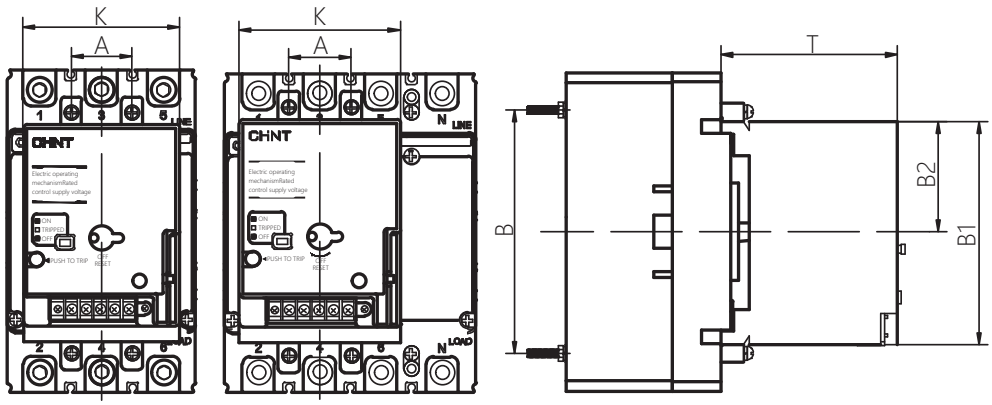

Figure22 -Motor driven mechanism overall and installation dimension

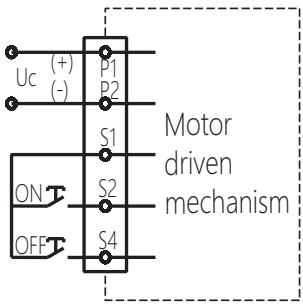

Figure 23 -Wring of motor diven mechanism (AC)

Table 4 NXM series motor riven mechanism overall and installation dimension

Unit: mm

Dimension	Code	Specification						
		NXM-63 NXM-125	NXM-160	NXM-250	NXM-400 NXM-630	NXM-800	NXM-1000	NXM-1250 NXM-1600
Overall dimension	K	74	90	90	130	130	130	130
	B1	102	116	116	176	176	176	176
	B2	51	53	60.5	88	88	88	88
	T	92	97	97.5	154	153	154.5	156
Installation dimension	A	25	30	35	44	58	70	70
	B	117	130.5	142	194	200	243	314

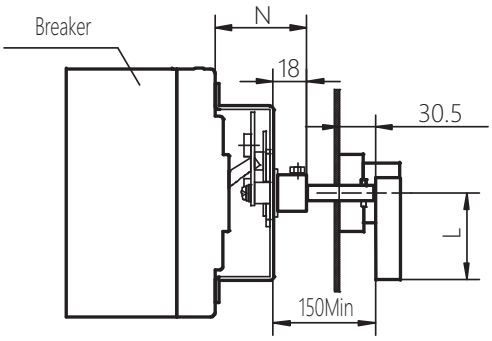

(L Other sizes can be selected through consultation with the manufacturer)

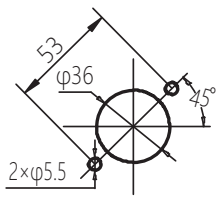

Schematic diagram of handle installation

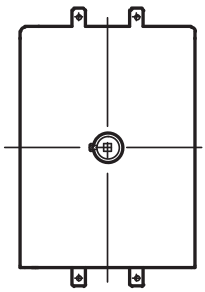

NXM-63/125/160/250/ 400/630/800/1000

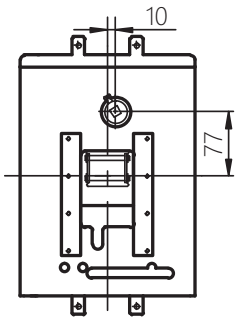

NXM-1250/1600

Figure 24 Manual operation mechanism installation dimension

Table 5 NXM Series manual operation mechanism installation dimension

Unit: mm

Size code	Specification						
	NXM-63 NXM-125	NXM-160	NXM-250	NXM-400 NXM-630	NXM-800	NXM-1000	NXM-1250 NXM-1600
N	53.5	61.5	63.5	98	97	97	68.5
L	65			95			

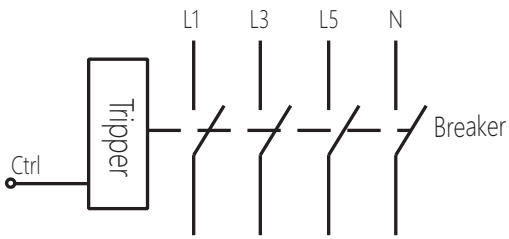

Figure 25 Wiring of special tripper for prepaid electricity meter

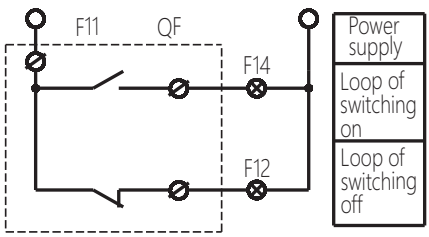

Figure 26 Wiring of auxiliary contact

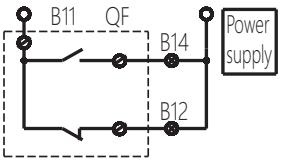

Figure 27 Wiring of alarm contact

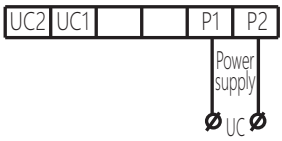

Figure 28 Wiring of under voltage tripper

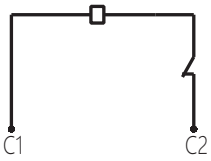

Figure 29 Wiring of shunt tripper

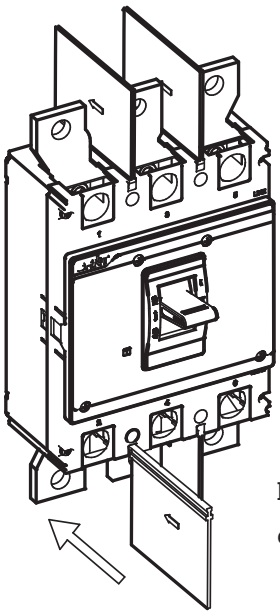

Insert in the direction of the arrow on the flash barrier

⚠

① Flash barrier shall be installed before operation.
② Check if the wiring is correct.
③ After installation, the insulation resistance to the ground shall not be less than 10MΩ.

Figure 30 Flash barrier or protective guard

6 Environmental Protection

In order to protect the environment, the product or product parts should be disposed of according to the industrial waste treatment process, or be sent to the recycling station for assortment, dismantling and recycling.

CHINT

QC PASS

NXM Series
Moulded-Case Circuit-Breaker
IEC/EN 60947-2

Check 17

Test date: Please see The packing

ZHEJIANG CHINT ELECTRICS CO., LTD.

CHINT ELECTRICS

NXM Series
Moulded-Case Circuit-Breaker
User Instructions

Zhejiang Chint Electrics Co., Ltd.

Add: No.1, CHINT Road, CHINT Industrial Zone,North Baixiang,
Yueqing, Zhejiang 325603,P.R.China
E-mail: global-sales@chint.com
Website: http://en.chint.com